RoHS 2.0+HF

检验规范

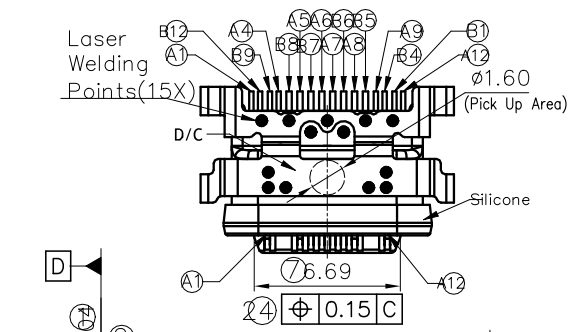

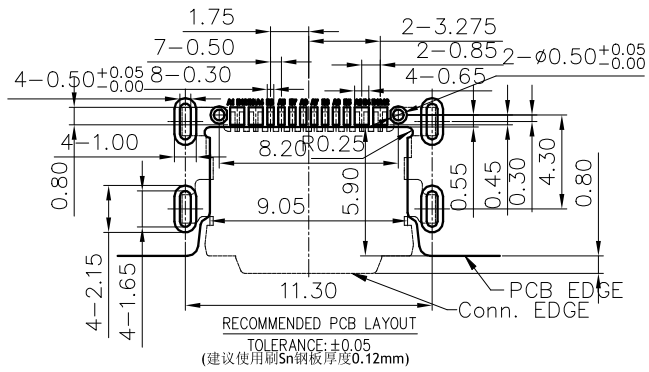

NOTES:
1.MATERIAL SPECIFICATION:
1-1.HOUSING: High-Temp Plastics,UL94V-0,Color: Black.
1-2.CONTACTS: Copper Alloy T=0.25mm.
1-3.OUTER SHELL: Stainless Steel,T=0.30mm.
1-4.INNER SHELL: Stainless Steel,T=0.20mm.
1-5.MID-PLATE: Stainless Steel,T=0.20mm.
1-6.SOLDER-PLATE: Stainless Steel,T=0.10mm.
2.PLATING SPECIFICATION:
2-1.CONTACS:
Ni UNDERPLATED OVER ALL;
Gold Plated On Contact Area;
Gold Flash Plated On Solder Area.
2-2.SHELL:
Ni UNDERPLATED OVER ALL;
Gold Flash Plated ON Solder Leg.
3.RoHS AND HF COMPLIANT.
4.MECHANICAL PERFORMANCE:
4-1.MATING FORCE: 6~20N (Initial);5~20N (After)
4-2.UNMATING FORCE: 8~20N (Initial);6~20N (After)
4-3.DURABILITY: 10000 CYCLES.
5.ELECTRICAL PERFORMANCE:
5-1.CURRENT RATING: 3A; VOLTAGE RATING: 5.0V
5-2.LLCR:
VBUS & GND PINS: 40mΩ/PIN MAX.;
OTHERS PINS: 40mΩ/PIN MAX.;
LLCR MAX. CHANGE OF ALL PINS: 10mΩ.
5-3.INSULATION RESISTANCE: 100MΩ MIN.
5-4.DIELECTRIC WITHSTANDING VOLTAGE:
100V AC FOR 1 MINUTE.
6.ENVIROMENTAL PERFORMANCE:
OPERATING TEMPERATURE: -20℃~+85℃.
7.RECOMMENDED PROCESS:
THE PEAK TEMPERATURE ON THE BOARD
SHALL MAINTAIN 10±1 SECONDS AT 255±5℃.

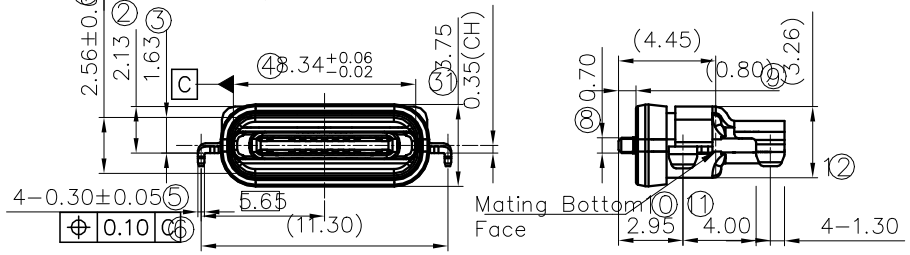

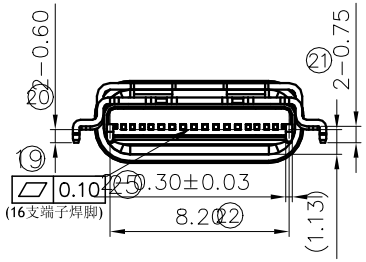

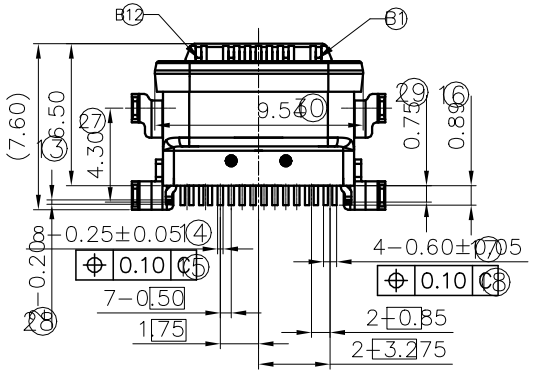

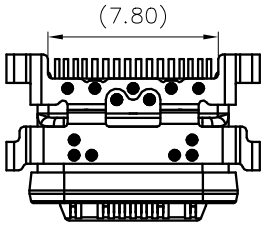

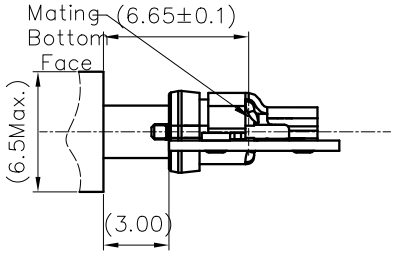

Pin Assignments

Contact Number	Signal Name	Contact Number	Signal Name
A1	GND	B12	GND
A4	VBUS	B9	VBUS
A5	CC1	B8	SBU2
A6	Dp1	B7	Dn2
A7	Dn1	B6	Dp2
A8	SBU1	B5	CC2
A9	VBUS	B4	VBUS
A12	GND	B1	GND

版次 REV.	日期 DATE	变更内容 DESCRIPTION	审核 CHK.	核准 APPD.
A0	19.11.15	新版发行	LXZ	LXZ

一般公差 GENERAL TOLERANCE
X.X ±0.35 X° ±6°
X.XX ±0.25 X.X° ±3°
X.XXX ±0.15 ▲ MAJOR DIM.
单位 UNIT mm

绘图 DR. | 审核 CHK. | 核准 APPD.

料号 PART NO.: W-UTP-CH035-K16
文件编号 NUMBER: ENDPW03
品名 TITLE: USB Type-C 母 16pin 防水型 CH=0.35,外露0.8

JCTC®

比例 SCALE 1:1 | SHEET 1/1 | 版次 REV. A0