RoHS 2.0+HF

检验规范

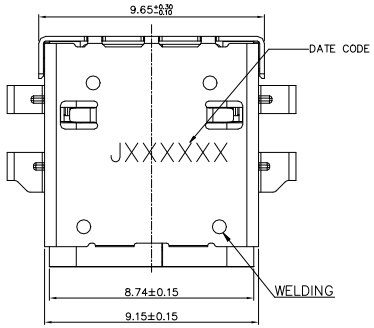

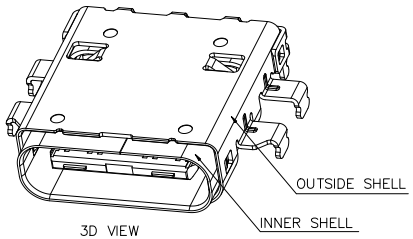

3D VIEW

NOTES:
1. MATERIAL:
   1.1 OUTSIDE SHELL: SUS301R-1/2H T=0.20mm
   1.2 INNER SHELL: SUS301R-1/2H T=0.20mm
   1.3 SIGNAL: SUS301R-H T=0.10mm
   1.4 RFI PAD: SUS316R-1/2H T=0.08mm
   1.5 HOUSING: PA9T UL94V-0 BLACK
   1.6 TERMINAL: C19400-H
2. PLATING:
   2.1 TERMINAL: SEE PIN
   2.2 SHELL: 50u"MIN.NICKEL PLATED
3.ELECTRICAL CHARACTERISTICS:
   3.1 CURRENT RATING: 5.0 A
       VOLTAGE RATING: 20.0 V
   3.2 LLCR: VBUS& GND PINS: 40mΩ/PIN MAX
       OTHER PINS : 40mΩ/PIN MAX
       CHANGE OF ALL PINS: 10mΩ
   3.3 INSULATION RESISTANCE: 100MΩ MIN.
4.MECHANICAL CHARACTERISTICS:
   4.1 INSERTION FORCE: 0.5~2.0kg.
   4.2 WITHDRAWAL FORCE: 0.8~2.0kg.(INTITIAL:1000 CYCLES) 0.6~2.0kg.(AFTER LIFE TEST)
5.LIFE TEST: 10000 CYCLES MIN

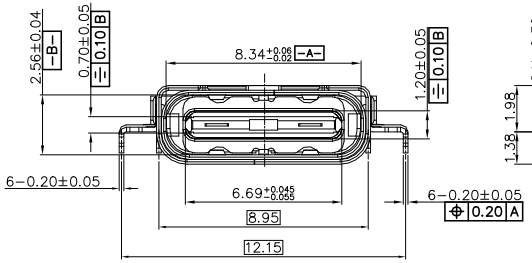

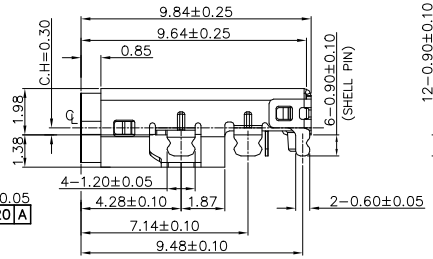

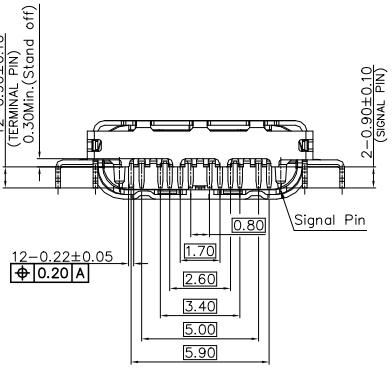

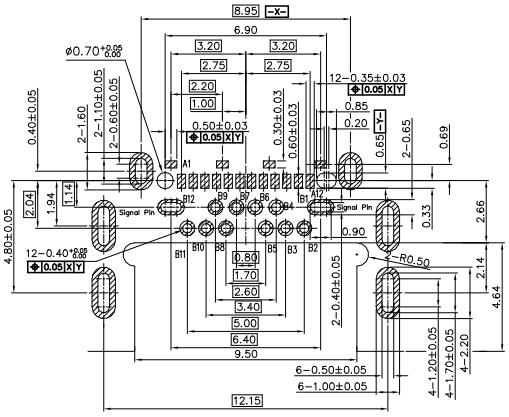

RECOMMENDED PCB LAYOUT(TOP VIEW)
(TOLERANCE=±0.05mm)

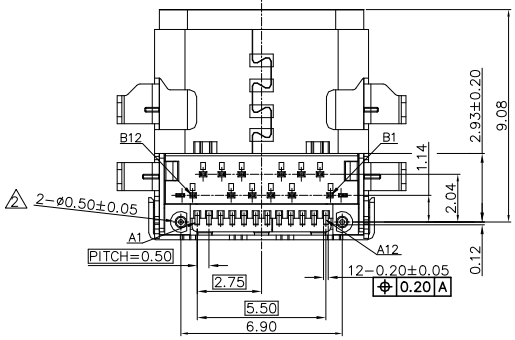

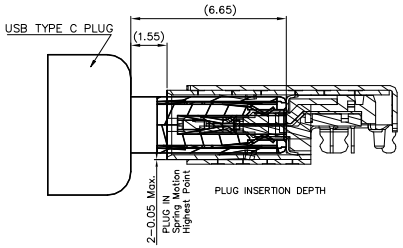

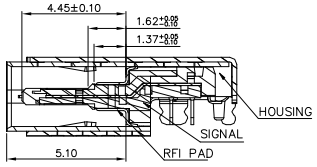

A0	18.09.04	新版发行	LXZ	LXZ
版次REV.	日 期 DATE	变 更 内 容 DESCRIPTION	审核CHK.	核准APPD.

一般公差GENERAL TOLERANCE		
X.X ±0.35	X° ±6°	
X.XX ±0.25	X.X° ±3°	
X.XXX ±0.15	▲ MAJOR DIM.	
单位 UNIT mm		

绘 图 DR.	
审 核 CHK.	
核 准 APPD.	

料号 PART NO.	文件编号 NUMBER
W-UTP-CH030-24P	ENDPW03

品名TITLE

USB TYPE C (C.H=0.30mm)

JCTC®

比例SCALE	SHEET	版次 REV.
1:1	1/1	A0