RoHS 2.0+HF

检验规范

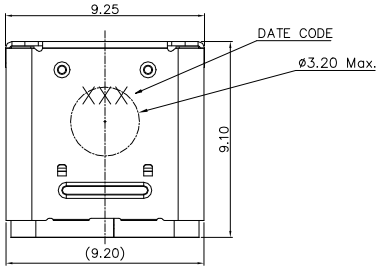

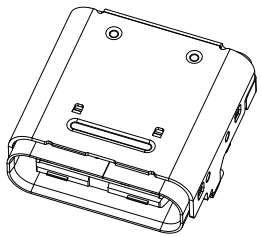

3D VIEW

NOTES:
1. MATERIAL:
   1.1 SHELL: SUS301R-1/2H T=0.20mm
   1.2 SIGNAL: SUS301R-H T=0.10mm
   1.3 RFI PAD: SUS301R-H T=0.08mm
   1.3 HOUSING: PA9T+45%G.F. UL94UL-0 BLACK
   1.4 TERMINAL: NKE012R-H T=0.10mm
2. PLATING:
   2.1 TERMINAL: SEE PIN
   2.2 SHELL: NICKEL PLATED 60u"MIN.
3.ELECTRICAL CHARACTERISTICS:
   3.1 RATING: 20V 5A
   3.2 CONTACT RESISTANCE: 40mΩ MAX
   3.3 DIELECTRIC WITHSTANDING VOTAGE: 100V AC FOR ONE MINUTE
   3.4 INSULATION RESISTANCE: 100MΩ MIN.
4.MECHANICAL CHARACTERISTICS:
   4.1 INSERTION FORCE: 0.5~2.0kgf.(INTITIAL)
   4.2 WITHDRAWAL FORCE: 0.8~2.0kgf.(INTITIAL) 0.6~2.0kgf.(AFTER LIFE TEST)
5.LIFE TEST: 10,000CYCLES MIN

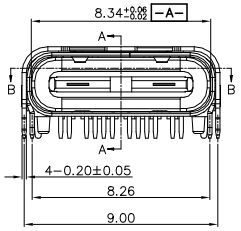

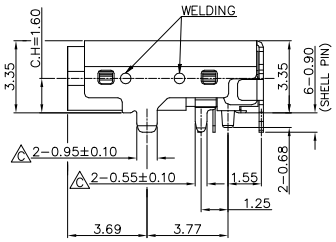

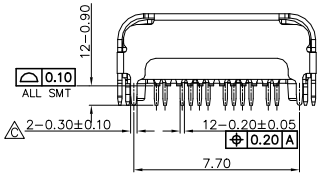

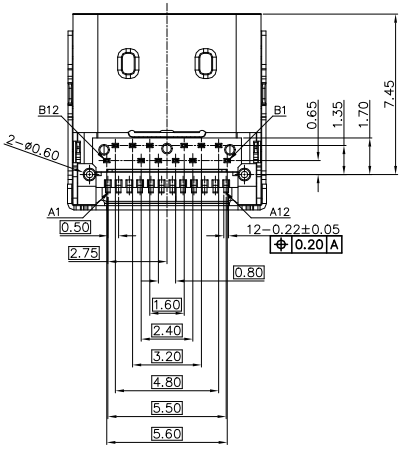

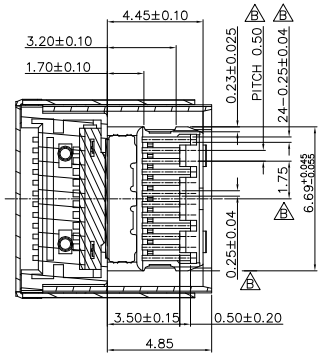

SECTION B-B

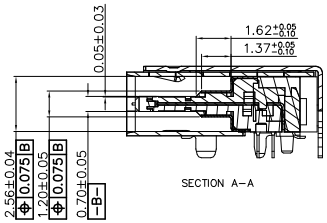

SECTION A-A

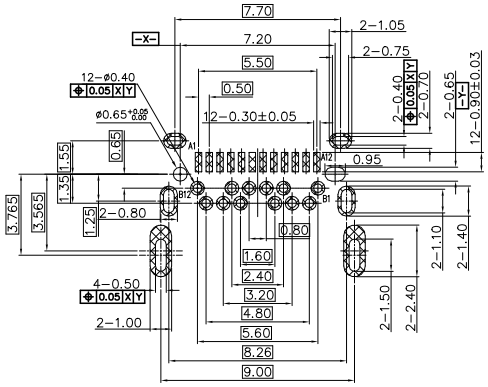

RECOMMENDED PCB LAYOUT(TOP VIEW)
(TOLERANCE=±0.05mm)

A0	17.10.23	新版发行	LXZ	LXZ
版次REV.	日 期 DATE	变 更 内 容 DESCRIPTION	审核CHK.	核准APPD.

一般公差GENERAL TOLERANCE		
X.X ±0.35	X° ±6°	
X.XX ±0.25	X.X° ±3°	
X.XXX ±0.15	▲ MAJOR DIM.	
单位 UNIT mm		

绘 图 DR.	
审 核 CHK.	
核 准 APPD.	

料号 PART NO.	文件编号 NUMBER
W-USB-CH160-TC27	ENDPW03

品名TITLE

USB TYPE C (C.H=1.60mm)

JCTC®

比例SCALE	SHEET	版次 REV.
1:1	1/1	A0