RoHS 2.0+HF

检验规范

NOTES:

SPECIFICATION:

1. CURRENT RATING: 3.0A MAX
2. VOLTAGE: 100 VAC
3. TEMPERATURE RANGE: -30 ℃ ~ 85 ℃
4. CONTACT RESISTANCE: 40 MILLIONHM MAX
5. INSULATION RESISTANCE: 100 MEGOHMS MIN.
6. LNSERTION FORCE : 5N~20N
7. UNMATING FORCE: 8N~20N
8. DURABILITY: 10,000 CYCLES

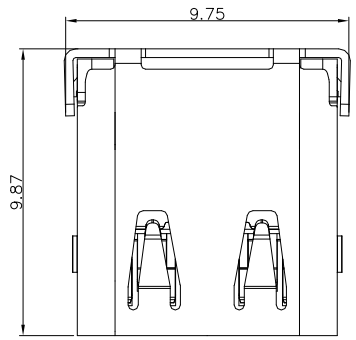

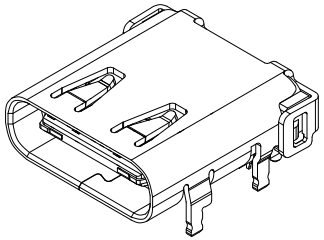

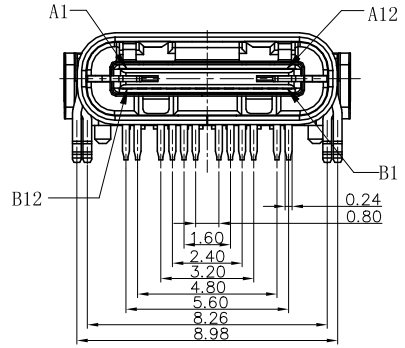

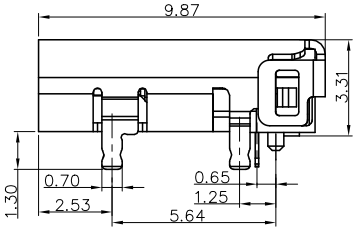

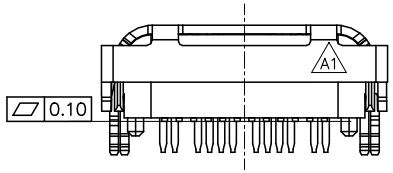

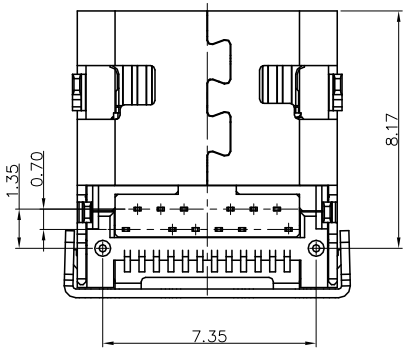

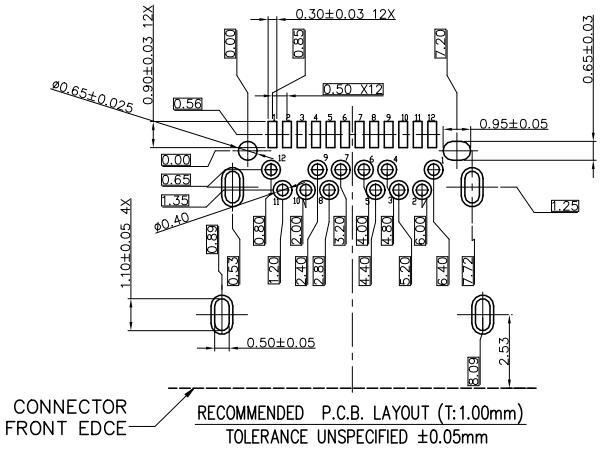

PIN	SIGNAL NAME	PIN	SIGNAL NAME
A1	GND	B12	GND
A2	SSTXP1	B11	SSRXP1
A3	SSTXN1	B10	SSRXN1
A4	VBUS	B9	VBUS
A5	CC1	B8	SBU2
A6	DP1	B7	DN2
A7	DN1	B6	DP2
A8	SBU1	B5	CC2
A9	VBUS	B4	VBUS
A10	SSRXN2	B3	SSTXN2
A11	SSRXP2	B2	SSTXP2
A12	GND	B1	GND

NO.	DESCRIPTION	MATERIAL	REMARKS	QTY
5	SHELL	STAINLESS STEEL	NI Plated	1PCS
4	SPRING	STAINLESS STEEL	---	1PCS
3	SHIELDING PLATE	STAINLESS STEEL	NI Plated	1PCS
2	CONTACT	COPPER ALLOY	Au/NI Plated	1SET
1	HOUSING	HIGH TEMPERATURE PLASTIC	BLACK	1PCS

版次REV.	日 期 DATE	变 更 内 容 DESCRIPTION	审核CHK.	核准APPD.
A0	18.07.31	新图面发行	李兴泽	

一般公差GENERAL TOLERANCE

X.X	±0.35	X°	±6°
X.XX	±0.25	X.X°	±3°
X.XXX	±0.15	▲ MAJOR DIM.	

单位 UNIT mm

绘 图 DR.

审 核 CHK.

核 准 APPD.

料号 PART NO. W-USB-CH041-TC031

文件编号 NUMBER ENDPW03

品名TITLE USB C F DIP+SMT(铁壳有缺口) CONN.

JCTC®

比例SCALE	SHEET	版次 REV.
1/1	1/1	A0