RoHS 2.0+HF

检验规范

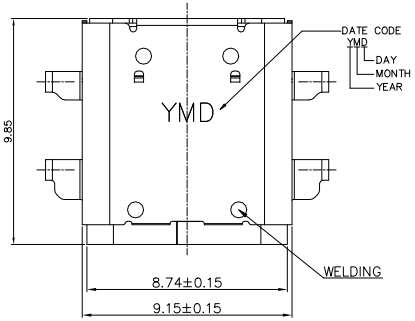

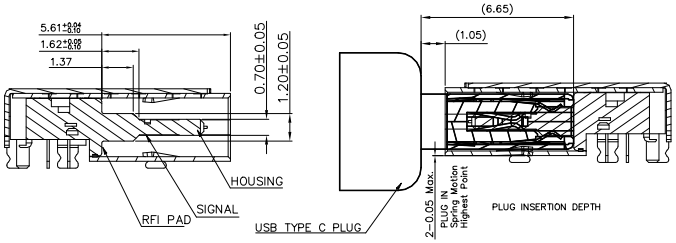

NOTES:
1. MATERIAL:
   1.1 OUTSIDE SHELL: SUS301R-1/2H T=0.20mm
   1.2 INNER SHELL: SUS301R-1/2H T=0.20mm
   1.3 SIGNAL: SUS301R-H T=0.10mm
   1.4 RFI PAD: SUS301R-H T=0.08mm
   1.5 HOUSING: LCP+30%G.F. UL94UL-0 BLACK
   1.6 TEMINARL: COPPER ALLOY T=0.10mm
2. PLATING:
   2.1 TERMINAL: SEE PIN
   2.2 SHELL: NICKEL PLATED 60u"MIN.
3. ELECTRICAL CHARACTERISTICS:
   3.1 CURRENT RATING: 3.0 A
       VOLTAGE RATING: 5.0 V
   3.2 LLCR: VBUS& GND PINS: 40mΩ/PIN MAX
       OTHER PINS : 40mΩ/PIN MAX
       LLCR MAX. CHANGE OF ALL PINS: 10mΩ
   3.3 INSULATION RESISTANCE: 100MΩ MIN.
4. MECHANICAL CHARACTERISTICS:
   4.1 INSERTION FORCE: 0.5~2.0kg.
   4.2 WITHDRAWAL FORCE: 0.8~2.0kg.(INTITIAL)
0.5~2.0kg.(AFTER LIFE TEST)
5. LIFE TEST: 10000 CYCLES MIN

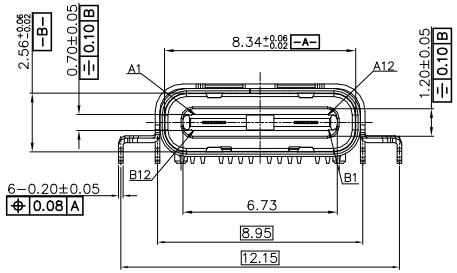

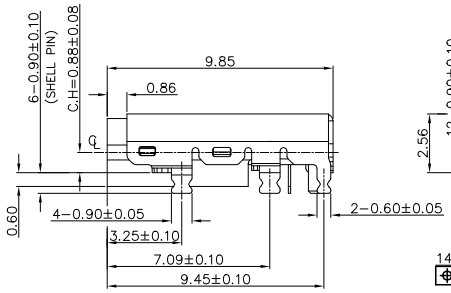

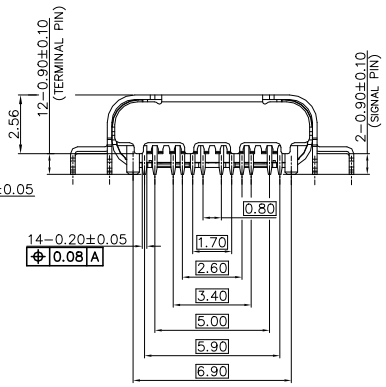

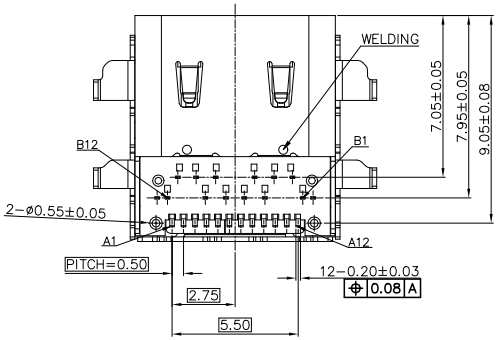

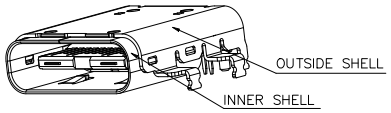

3D VIEW

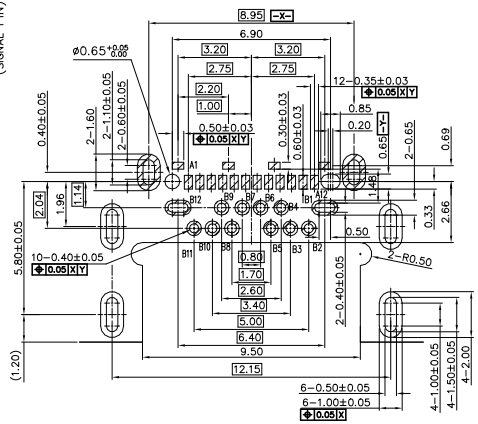

RECOMMENDED PCB LAYOUT(TOP VIEW)
(TOLERANCE=±0.05mm)

版次 REV.	日 期 DATE	变 更 内 容 DESCRIPTION	审核 CHK.	核准 APPD.
A0	17.08.19	新版发行	LXZ	LXZ

一般公差 GENERAL TOLERANCE			
X.X	±0.35	X°	±6°
X.XX	±0.25	X.X°	±3°
X.XXX	±0.15	▲ MAJOR DIM.	
单位 UNIT mm			

绘 图 DR.	
审 核 CHK.	
核 准 APPD.	

料号 PART NO.	文件编号 NUMBER
W-USB-0669-CH88	ENDPW03

品名 TITLE

USB TYPE C (C.H=0.88mm)

JCTC®

比例 SCALE	SHEET	版次 REV.
1:1	1/1	A0