环保物料

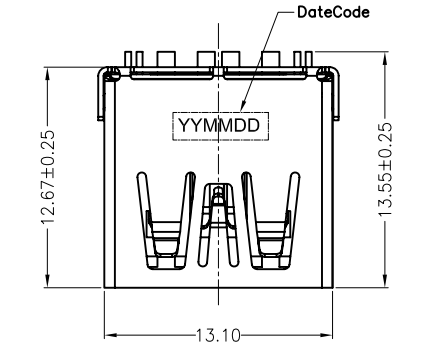

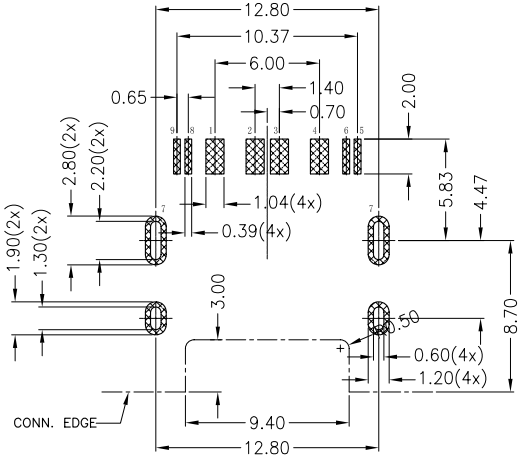

RECOMMENDED PCB LAYOUT (TOP VIEW)
GENERAL TOLERANCES:±0.05

NOTES:
1. MATERIAL AND PLATING:
   Housing: PA9T+30%G.F,UL94V-0,Black
   Contact(4Pin): Copper Alloy,Au And Sn Plated.
   Contact(5Pin): Copper Alloy,Au And Sn Plated.
   Shell: Stainless Steel,Ni Plated.
2. MECHANICAL CHARACTERISTIC
   Mating Force: 35N(3.57Kgf) Max.
   Unmating Force: 10N(1.02Kgf) Min.
   Durability: 5,000 Cycles.
3. ELECTRICAL CHARACTERISTIC
   Current Rating: 1.8A(Pin1,4),
   0.25A For Other Contacts.
   Voltage Rating: 30V AC Max.
   Contact Resistance: 30m Ohm Max.
   Insulation Resistance: 100M Ohm Min.
   Dielectric Withstanding Voltage: 100V AC.
4. TEMPERATURE
   Openrating Temperature: -40°C~+85°C
   Storage Temperature: -60°C~+105°C
5. DATECODE INFORMATION:
   YYMMDD (Y:YEAR M:MONTH D:DATE)
6. ORDER INFORMATION:

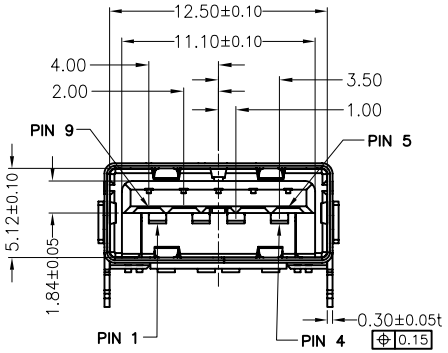

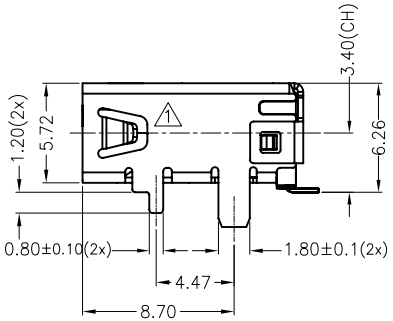

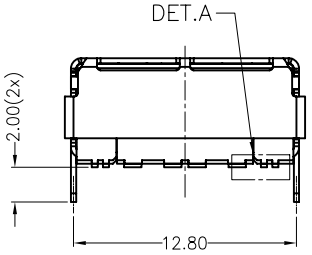

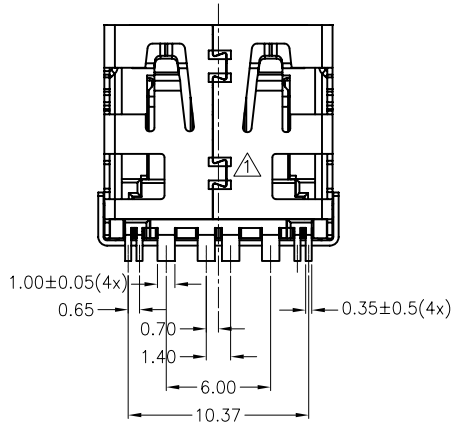

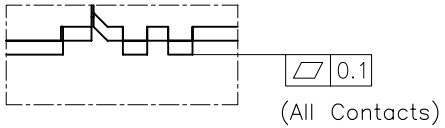

DET.A
4:1

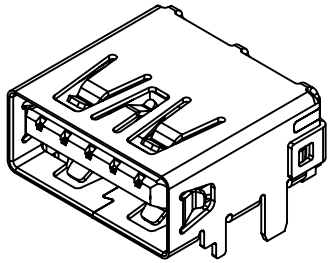

Contact Number	Signal Name
PIN1	VBUS
PIN2	D-
PIN3	D+
PIN4	GND
PIN5	StdA_SSRX-
PIN6	StdA_SSRX+
PIN7	GND_DRAIN
PIN8	StdA_SSTX-
PIN9	StdA_SSTX+
Shell	Shield

版次REV.	日 期 DATE	变 更 内 容 DESCRIPTION	审 核 CHK.	核 准 APPD.
A0	19.11.15	新图面发行	李兴泽	杨章雄

一般公差GENERAL TOLERANCE
X.X ±0.30
X.XX ±0.20
X.XXX ±0.10
X° ±2°
X.X° ±1°
▲ MAJOR DIM.
单位UNIT mm

绘 图 DR.	李兴泽
校 对 CHK.	杨章雄
审 核 CHK.	
核 准 APPD.	

JCTC® 胜蓝科技股份有限公司
TERMINAL&CONNECTORS 东莞市富智达电子科技有限公司

品名TITLE
USB3.1 GEN2 A/F 8P SMT TYPE
CH=3.4mm

料号 PART NO.
W-N3-CH340-S07

文件编号 NUMBER
ENDPT01

比例SCALE	SHEET	版次 REV.
1/1	1/1	A0