环保物料 HF

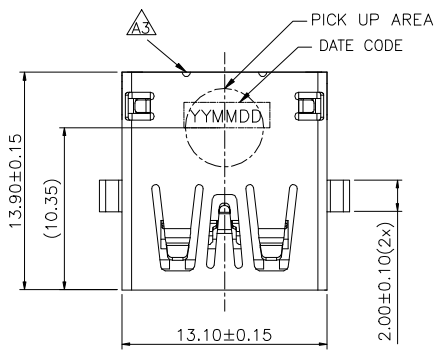

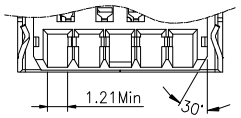

Section:C–C

Date Code说明：

YY MM DD
- DAY (01~31)
- Month(01~12)
- YEAR (22–2022)

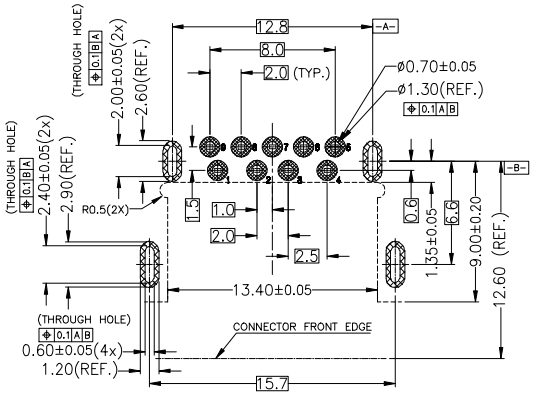

RECOMMENDED PCB LAYOUT (TOP VIEW)
GENERAL TOLERANCES:±0.05

NOTES:
1. MECHANICAL CHARACTERISTIC
   1.1 Mating Force: 25N Max.
   Unmating Force: 10~25N
   1.2 Contact retention: 5N/pin min after IR
2. ELECTRICAL CHARACTERISTIC
   2.1 Rating Voltage:30V AC.
   2.2 Current Rating:1.8A(For VBUS And GND Pin)
   Other Contacts 0.25A
   2.3 Contact Resistance: 30m Ohm Max,after Δ10m Ohm
   2.4 Insulation Resistance: 1000M Ohm Min
   2.5 Dielectric Withstanding Voltage: 500V AC Min
   2.6 Meet Gen2.
3. TEMPERATURE
   3.1 Operating Temperature: −40°C~+85°C
   3.2 Salt Spray: 48Hours.
4. Burr: 0.05mm Max.
5. Tape and reel packing satisfy EIA−364−481−D standard.
6. Dimension marked △ should 100% CCD inspecte
   Dimension marked ◬ should CPK>1.33
   Dimension marked ★ should SIP inspecte by QC and IQC

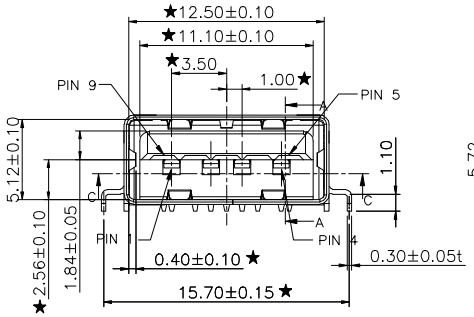

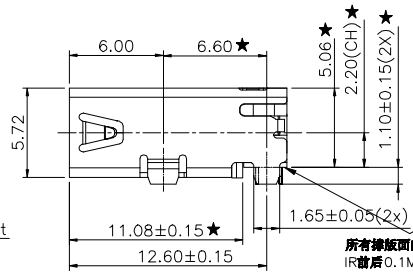

所有掺板面的共面度：
IR前后0.1Max.★

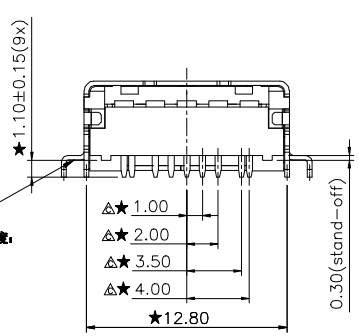

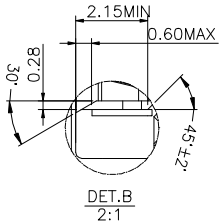

DET.B
2:1

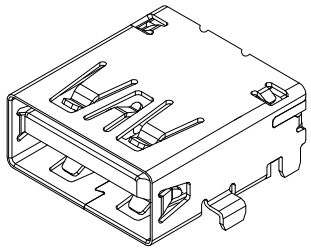

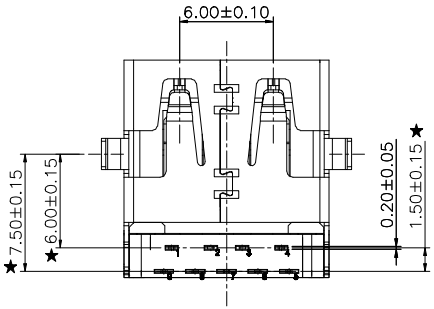

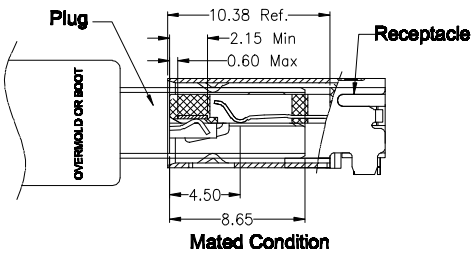

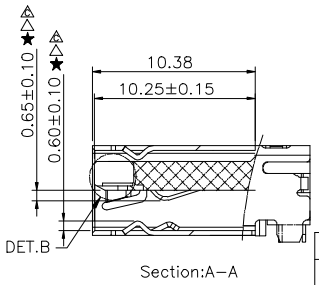

Section:A–A

CONNECTOR BOM:

ITEM	PART NAME	QTY	MATERIA	FINISH/PLATING
4	HOUSING	1	PA9T	BLACK,UL94 V−0
3	SHELL	1	SUS201−H,T=0.30	NI 50u"MIN PLATED OVER ALL
2	4P CONTACT	4	C5191−H,T=0.20	CONTACT AREA 1u"MIN,SOLDER AREA PLATING 80u"MIN MATTE TIN,UNDER PLATING 50u"MIN NICKEL
1	5P CONTACT	5		

Contact Number	Signal Name
PIN1	VBUS
PIN2	D-
PIN3	D+
PIN4	GND
PIN5	StdA_SSRX-
PIN6	StdA_SSRX+
PIN7	GND_DRAIN
PIN8	StdA_SSTX-
PIN9	StdA_SSTX+
Shell	Shield

REV.	REVISION RECORD	DATE
A0	新图面发行	18.07.21
A1	更新图面发行	21.07.06
A2	按客户标准更新图纸	23.09.06
A3	依实物更新图纸 ◬3	24.01.17

UNIT: MM
SIZE: A4

GENERAL TOLERANCES	
LINEAR	ANGLES
0.0±0.30	X°REF±6°
0.00±0.20	X°±3°
0.000±0.10	X°X'±2°

SCALE 1:1	NAME	DATE
APPROVED		
DESIGNER		
DRAWN	Mlicky Ma	24.01.17

PART NO. W−N3−CH220−021

DWG NO. ENDE05

TITLE N3.0 Rece. A Type 90° DIP Type CH=2.20MM(5G标准)

JCTC®

REV A3 SHEET 1/1

环保物料

PACKAGING INSTRUCTION I:

1. STAPLES SHOULD ONLY BE USED TO SET UP CARTON ALL CARTONS CLOSURES MUST BE DONE WITH TAPE.
2. FILL PACKAGING REEL WITH THE QUANTITIES AS INDICATED IN THE CHART.

PRODUCT P/N	PARTS PER SHIPPING CARTON	PARTS PER REEL (S.P.Q.)	TOTAL REELS PER PRIMARY CARTON
W-N3-CH220-021	3500 (PCS)	350 (PCS)	10

1.QUANTITY:350 PCS

2.COVER TAPE PEELING FORCE:

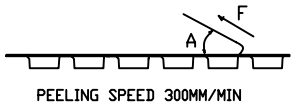

A	15°~ 0°
F	0.1N~1.3N

3.PART DIMENSIONS MEET EIA-481-D REQUIREMENT

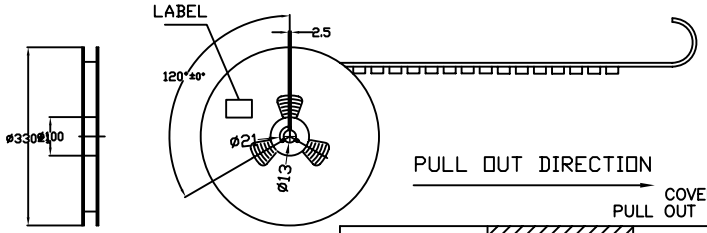

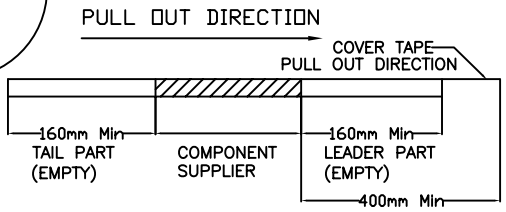

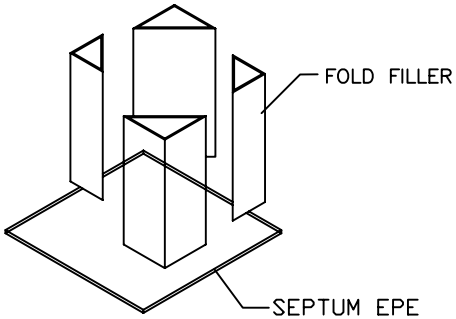

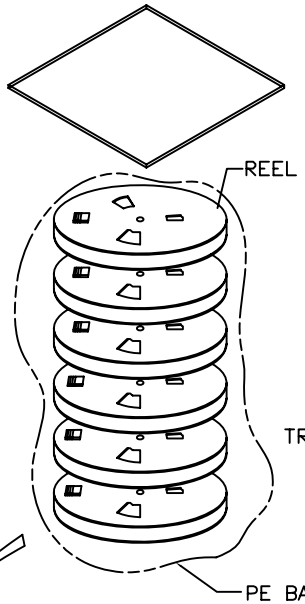

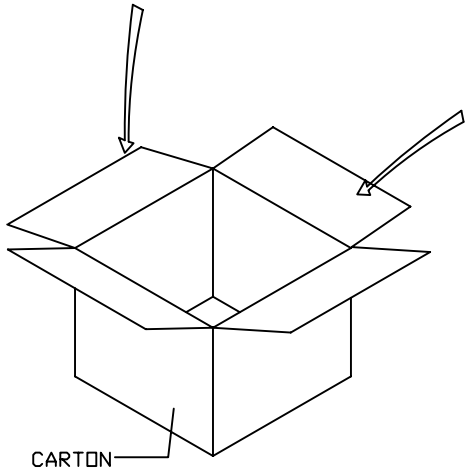

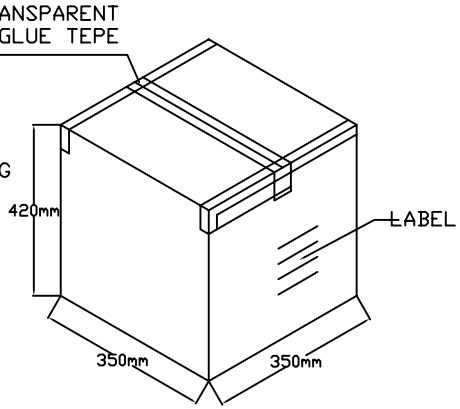

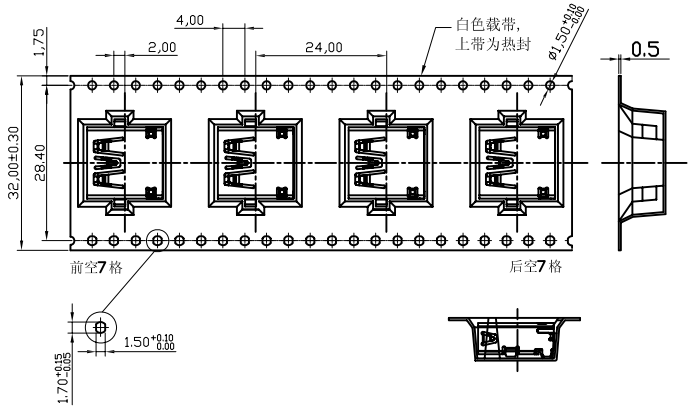

版次 REV.	日 期 DATE	变 更 内 容 DESCRIPTION	审 核 CHK.	核 准 APPD.
A1	21.07.06	更新图框发行	董东平	杨章雄
A0	18.07.21	新图面发行	李兴泽	杨章雄

一般公差 GENERAL TOLERANCE

X.X ±0.30 X° ±2°
X.XX ±0.20 X.X° ±1°
X.XXX ±0.10 ▲ MAJOR DIM.

单位 UNIT mm

绘 图 DR.
校 对 CHK.
审 核 CHK.
核 准 APPD.

料号 PART NO. W-N3-CH220-021

文件编号 NUMBER ENDPT01

品名 TITLE N3.0 Rece. A Type 90° DIP Type CH=2.20MM

JCTC® TERMINAL&CONNECTORS

比例 SCALE	SHEET	版次 REV.
1/1	1/1	A1