环保物料

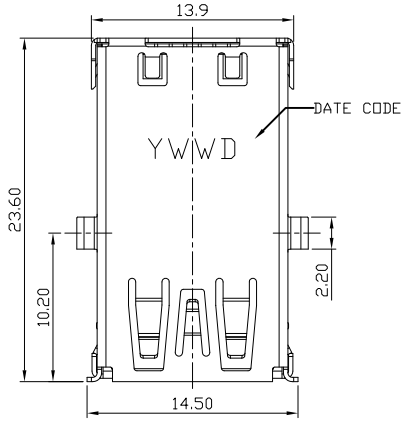

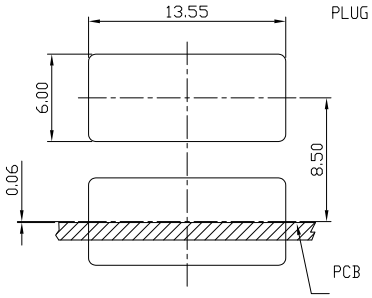

RECOMMEND PANEL CUTOUT

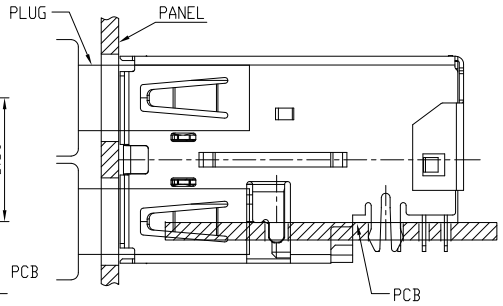

RECOMMEND MOUNTING CONFIGURATION

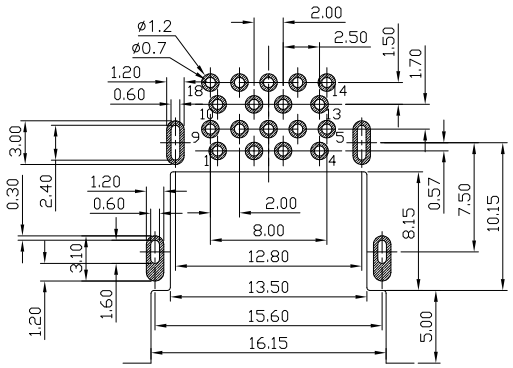

RECOMMENDED P.C.B LAYOUT
TOLERANCE: ±0.05(TOP VIEWS)

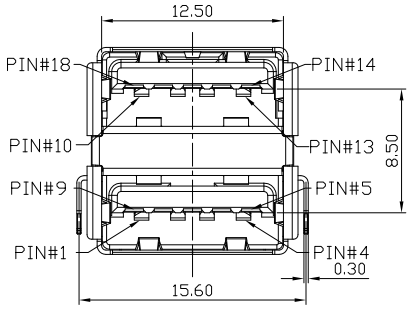

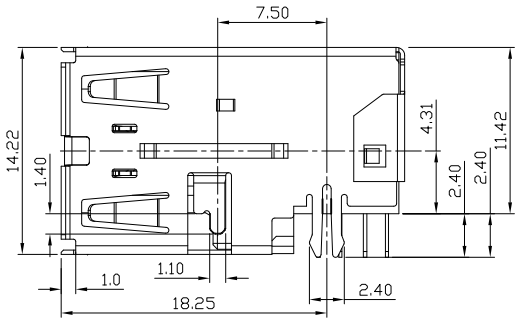

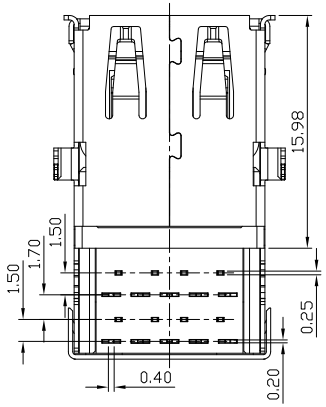

NOTES:
1. MATERIAL:
   1.1 HOUSING & COVER: PA4T, UL94V-0, COLOR : BLUE.
   1.2 CONTACTS 5PIN: BRASS,
   1.3 CONTACTS 4PIN: PHOSPHOR BRONZE,
   1.4 SHELL: SUS201.
   1.5 ISOLATED: SK7.
   1.6 REAR SHELL: SK7.
2. FINISH:
   2.1 CONTACTS: 0.762um[30u"] GOLD PLATED ON CONTACT AREA,
   2.54um[100u"] MIN. MATTE-TIN PLATED ON SOLDER TAIL,
   1.27um[50u"] MIN. NICKEL UNDERPLATED OVERALL.
   2.2 SHELL: 1.27um[50u"] MIN. NICKEL PLATED OVERALL.
   2.3 ISOLATED: 1.27um[50u"] MIN. NICKEL PLATED OVERALL.
3. REFLOW SOLDER CAPABLE TO 260°C
4.OPERATING TEMPEROTURE:-40°C ~ 85°C

N3A	-	F	F431	D	R	L	B	2	-	XX	30
1		2	3	4	5	6	7	8		9	10

1.N3A:USB 3.0 A TYPE
2.F:FEMALE
3.F431=中心高4.31mm
4.D:DIP
5.R:90°
6.L:L=PA4T
7.COLOR B:BLUE
8.外壳脚 2:鱼叉脚
9.TYPE码: TYPE 1
10.Contact Area plating on contacts
30: Au 30u"

REV.	REVISION RECORD	DATE
A0	The new version file were released	2021.4.21
A1	更新图框发行	2023.5.11

GENERAL TOLERANCES	
LINEAR	ANGLES
0.0±0.35	X° REF±6°
0.00±0.25	X° ±3°
0.000±0.15	X° X' ±2°

UNIT: MM
SIZE: A4

SCALE 1:1	NAME	DATE
APPROVED	Frey Yang	2023.5.11
DESIGNER	Daniel Dong	2023.5.11
DRAWN	Li Xing Ze	2023.5.11

PART NO. N3A-FF431DRLB2-B230
DWG NO. ENDE05
TITLE USB 3.0 A TYPE DIP 沉板式雙層加高(CH=4.31mm)

JCTC® TERMINAL&CONNECTORS

REV A1 SHEET 1/3