环保物料

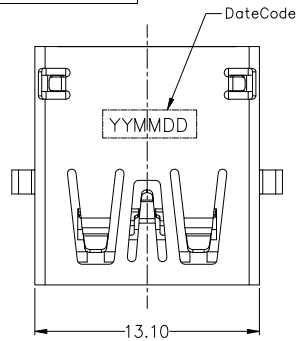

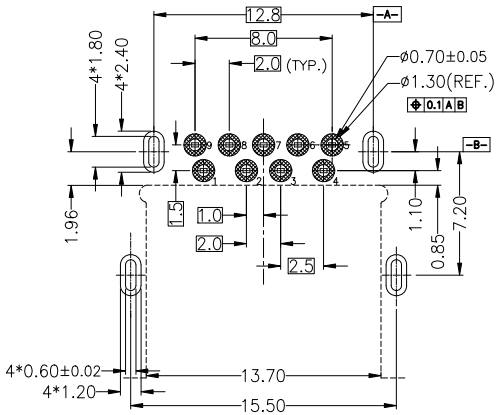

RECOMMENDED PCB LAYOUT (TOP VIEW)
GENERAL TOLERANCES:±0.05

NOTES:
1. MATERIAL AND PLATING:
   Housing: LCP+30%G.F,UL94V-0,Black.
   Contact(4Pin): Phosphor Bronze,Au And Sn Plated.
   Contact(5Pin): Brass,Au And Sn Plated.
   Shell: Stainless Steel,Ni Plated.
2. MECHANICAL CHARACTERISTIC
   Mating Force: 35N(3.57Kgf) Max.
   Unmationg Force: 10N(1.02Kgf) Min.
   Durability: 5,000 Cycles.
3. ELECTRICAL CHARACTERISTIC
   Current Rating: 2.5A(Pin1,4),
   0.25A For Other Contacts.
   Voltage Rating: 30V AC Max.
   Contact Resistance: 30m Ohm Max.
   Insulation Resistance: 100M Ohm Min.
   Dielectric Withstanding Voltage: 100V AC.
4. TEMPERATURE
   Openrating Temperature: -40°C~+85°C
   Storage Temperature: -60°C~+105°C
5. DATECODE INFORMATION:
   YYMMDD (Y:YEAR M:MONTH D:DATE)
6. ORDER INFORMATION:

N3A	-	F	F210	D	R	L	A	3	-	A8	XX
1		2	3	4	5	6	7	8		9	10

1.N3A:USB 3.0 A TYPE
2.F:FEMALE
3. F210=反向中心高2.10mm
4.D:DIP
5.R:90°
6.L:LCP
7.COLOR A:黑色
8.外壳脚 3:直脚
9.TYPE码: A8:不带翻边
10.Contact Area plating on contacts
01: G/F 03: Au 3u"
05: Au 5u" 10: Au 10u"
15: Au 15u" 30: Au 30u"

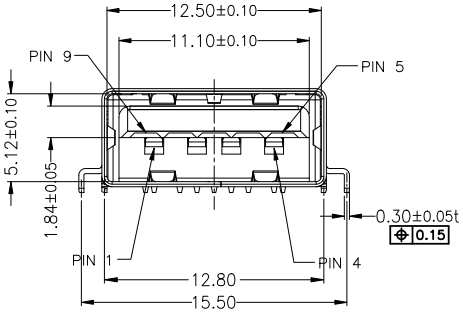

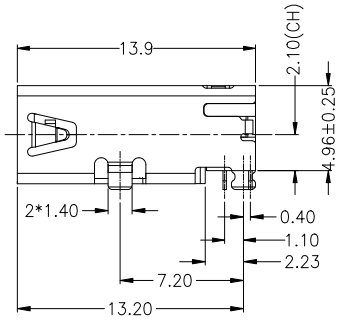

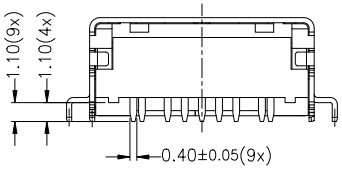

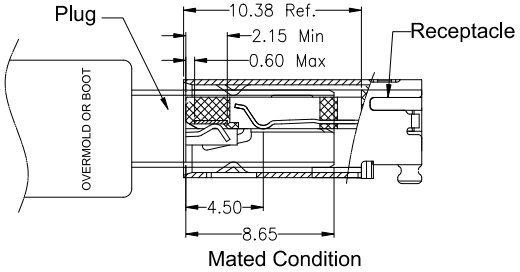

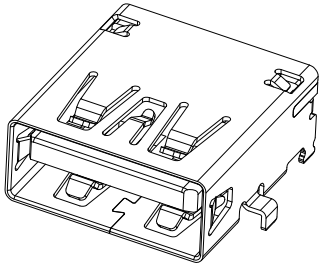

Contact Number	Signal Name
PIN1	VBUS
PIN2	D-
PIN3	D+
PIN4	GND
PIN5	StdA_SSRX-
PIN6	StdA_SSRX+
PIN7	GND_DRAIN
PIN8	StdA_SSTX-
PIN9	StdA_SSTX+
Shell	Shield

REV.	REVISION RECORD	DATE
A0	The new version file were released	2021.4.21

UNIT: MM
SIZE: A4

GENERAL TOLERANCES	
LINEAR	ANGLES
0.0±0.30	X° REF±6°
0.00±0.20	X° ±3°
0.000±0.10	X° X' ±2°

SCALE 1:1	NAME	DATE
APPROVED	Frey Yang	2021.4.21
DESIGNER	Daniel Dong	2021.4.21
DRAWN	Li Xing Ze	2021.4.21

PART NO. N3A-FF210DRLA3-A8XX
DWG NO. ENDE05
TITLE USB3.0 Rece. A Type 90° DIP Type CH=2.10MM

JCTC® TERMINAL&CONNECTORS

REV A0 SHEET 1/1