环保物料

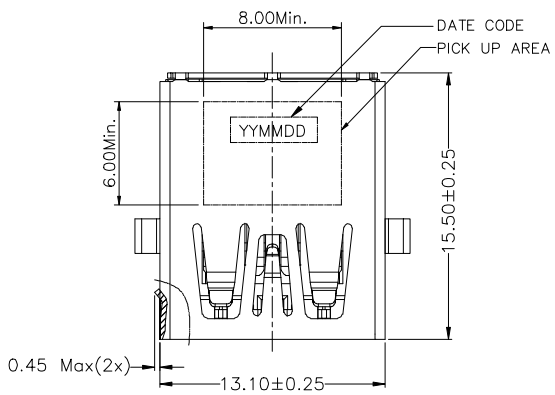

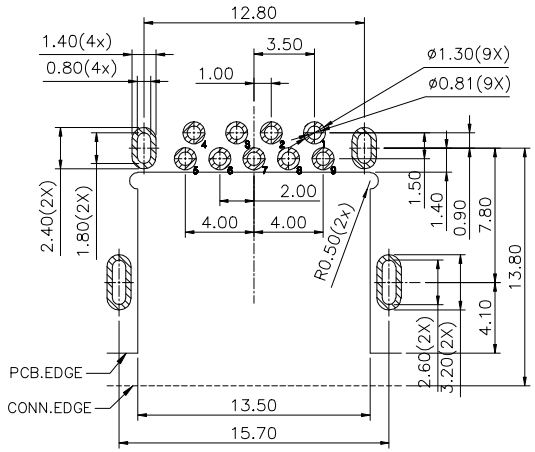

RECOMMENDED PCB LAYOUT (TOP VIEW)
GENERAL TOLERANCES:±0.05(t=1.2)

NOTES:
1. MATERIAL AND PLATING:
   Housing: PA9T+30%G.F,UL94V-0,Black
   Contact(4/5Pin): Copper Alloy,Au And Sn Plated.
   Shell: Stainless Steel,Ni Plated.
2. MECHANICAL CHARACTERISTIC
   Mating Force: 35N(3.57Kgf) Max.
   Unmationg Force: 10N(1.02Kgf) Min.
   Durability: 5,000 Cycles.
3. ELECTRICAL CHARACTERISTIC
   Current Rating: 1.8A(Pin1,4),
   0.25A For Other Contacts.
   Voltage Rating: 30V AC Max.
   Contact Resistance: 30m Ohm Max.
   Insulation Resistance: 100M Ohm Min.
   Dielectric Withstanding Voltage: 100V AC.
4. TEMPERATURE
   Operating Temperature: -40°C~+85°C
   Storage Temperature: -60°C~+105°C
5. DATECODE INFORMATION:
   YYMMDD (Y:YEAR M:MONTH D:DATE)
6. ORDER INFORMATION:

N3A-	F	C000	D	R	9	A	3-	00	01
1	2	3	4	5	6	7	8	9	10

1.N3A:USB 3.0 A TYPE
2.F:FEMALE
3.C000=沉板0.00mm
4.D:DIP
5.R:90°
6.9:9T
7.COLOR A:黑色
8.外壳脚 3:直脚
9.TYPE码: 00:普通规格
10.Contact Area plating on contacts
01: G/F

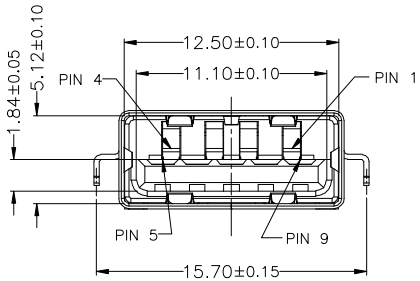

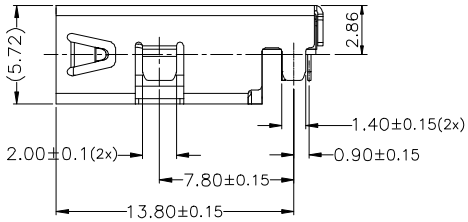

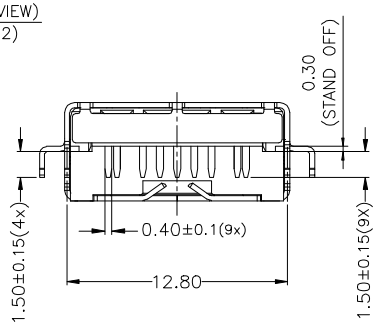

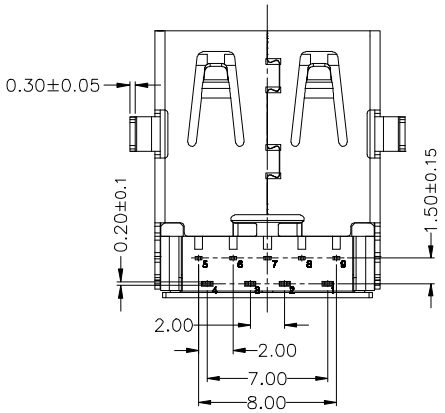

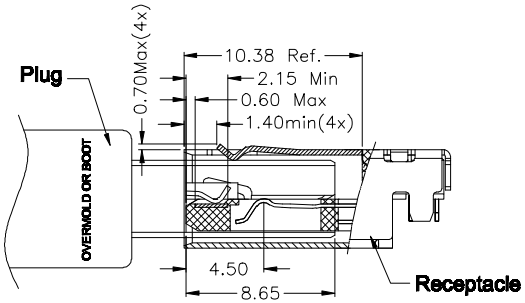

Mated Condition

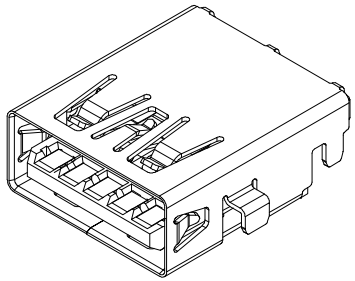

Contact Number	Signal Name
PIN1	VBUS
PIN2	D-
PIN3	D+
PIN4	GND
PIN5	StdA_SSRX-
PIN6	StdA_SSRX+
PIN7	GND_DRAIN
PIN8	StdA_SSTX-
PIN9	StdA_SSTX+
Shell	Shield

REV.	REVISION RECORD	DATE
A0	新图面发行	23.04.20

UNIT: MM
SIZE: A4

GENERAL TOLERANCES	
LINEAR	ANGLES
0.0±0.30	X° REF±6°
0.00±0.25	X° ±3°
0.000±0.10	X° X' ±2°

SCALE 1:1	NAME	DATE
APPROVED	Frey Yang	23.04.20
DESIGNER	Daniel Dong	23.04.20
DRAWN	Micky Ma	23.04.20

PART NO. N3A-FC000DR9A3-0001

DWG NO. ENDE05

TITLE
USB3.0 A TYPE RECEPTACLE REVERSE RIGHT ANGLE DIP C/H=0mm

JCTC®
TERMINAL&CONNECTORS

REV A0 SHEET 1/1

环保物料

PACKAGING INSTRUCTION:
1. STAPLES SHOULD ONLY BE USED TO SET UP CARTON ALL CARTONS CLOSURES MUST BE DONE WITH TAPE.
2. FILL PACKAGING REEL WITH THE QUANTITIES AS INDICATED IN THE CHART.

PRODUCT P/N	PARTS PER SHIPPING CARTON	PARTS PER REEL (S.P.Q.)	TOTAL REELS PER PRIMARY CARTON
N3A-FC000DR9A3-0001	6000 (PCS)	600 (PCS)	10

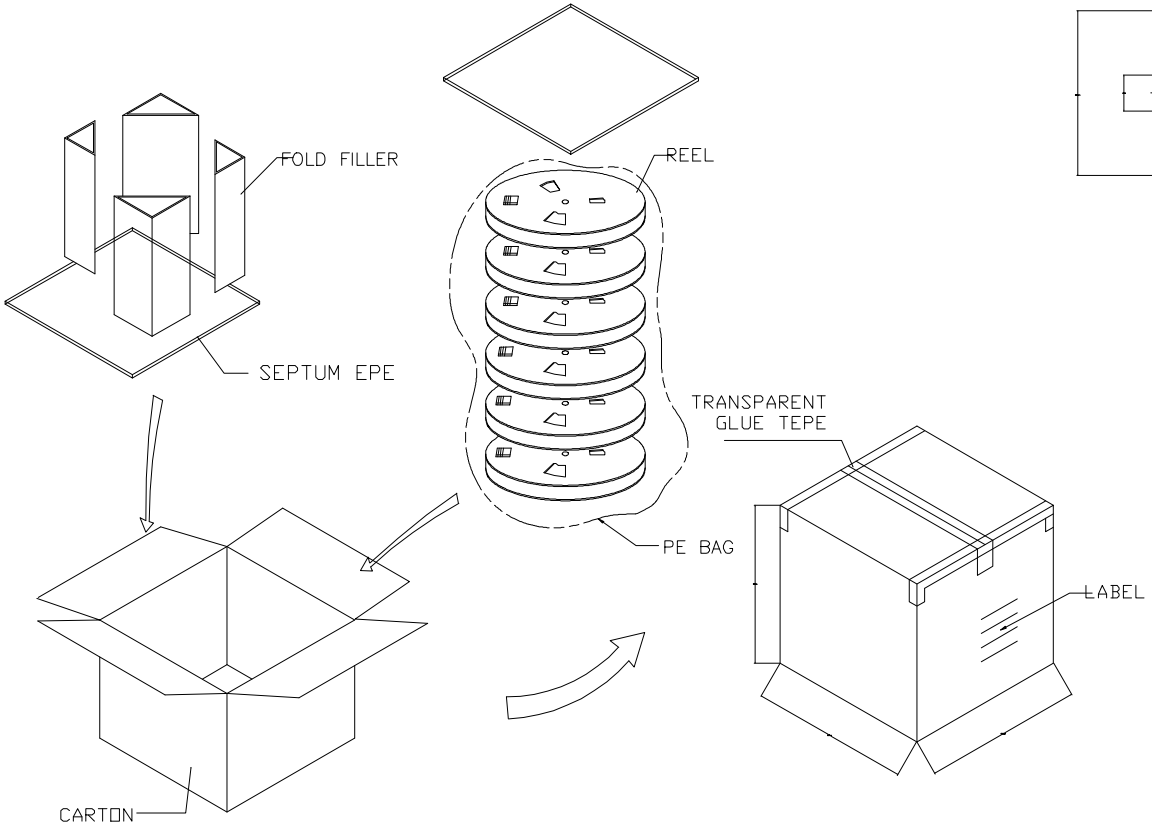

1.QUANTITY:600 PCS

2.COVER TAPE PEELING FORCE:

PEELING SPEED 300MM/MIN

A	15°~ 0°
F	0.1N~1.3N

3.PART DIMENSIONS MEET EIA-481-D REQUIREMENT

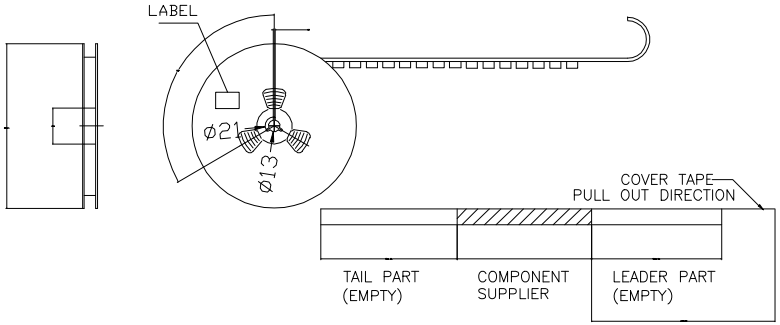

PULL OUT DIRECTION

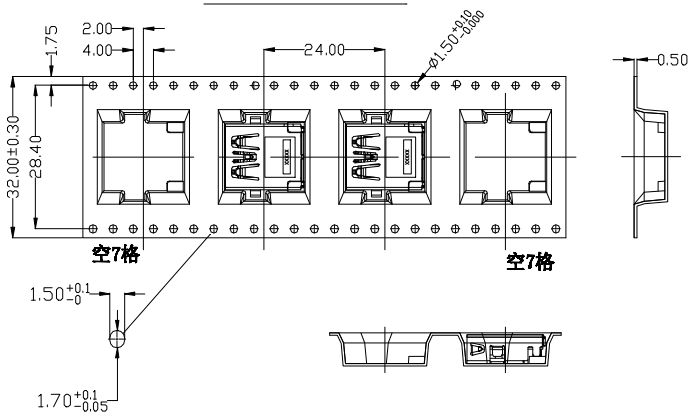

REV.	REVISION RECORD	DATE
A0	新图面发行	23.04.20

UNIT: MM
SIZE: A4

GENERAL TOLERANCES	
LINEAR	ANGLES
0.0±0.30	X° REF±6°
0.00±0.25	X° ±3°
0.000±0.10	X° X' ±2°

SCALE 1:1	NAME	DATE
APPROVED	Frey Yang	23.04.20
DESIGNER	Daniel Dong	23.04.20
DRAWN	Micky Ma	23.04.20

PART NO. N3A-FC000DR9A3-0001

DWG NO. ENDE05

TITLE USB3.0 A TYPE RECEPTACLE REVERSE RIGHT ANGLE DIP C/H=0mm

JCTC® TERMINAL&CONNECTORS

REV A0 SHEET 1/1