环保物料

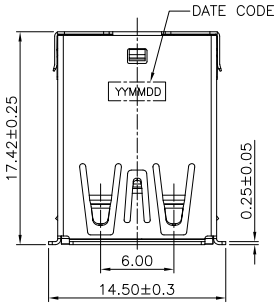

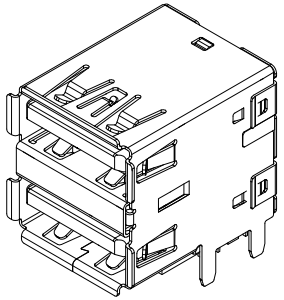

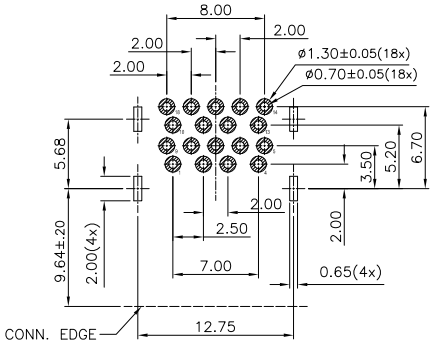

NOTES:
1. MATERIAL AND PLATING:
   Housing/Cover: PA9T+30%G.F,UL94V-0,BLACK.
   Contact: C5191,Gold 15u"Plating On Contact Area
   100u" Min. Tin Plating On Soldertailsl
   50u" Min. Nickel Underplating Over All.
   Front Shell: SUS201, 50u" Nickel Plated.
   Middle Shell: SUS201,No Plated.
2. MECHANICAL CHARACTERISTIC
   Mating Force: 35N(3.57Kgf) Max.
   Unmationg Force: 10N(1.02Kgf) Min.
   Durability: 5,000 Cycles.
3. ELECTRICAL CHARACTERISTIC
   Current Rating: 1.8A(Pin1,4),
   0.25A For Other Contacts.
   Voltage Rating: 30V AC Max.
   Contact Resistance: 30m Ohm Max.
   Insulation Resistance: 1000M Ohm Min.
   Dielectric Withstanding Voltage: 100V AC.
4. TEMPERATURE
   Openrating Temperature: -40°C~+85°C
   Storage Temperature: -60°C~+105°C
5. DATECODE INFORMATION:
   YMMDD (Y:YEAR M:MONTH D:DATE)
6. ORDER INFORMATION:

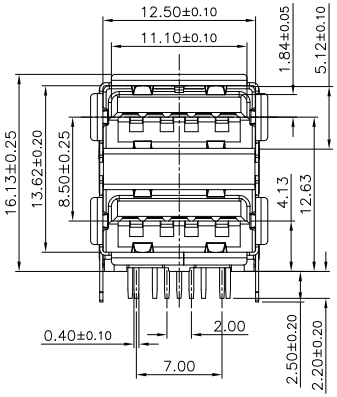

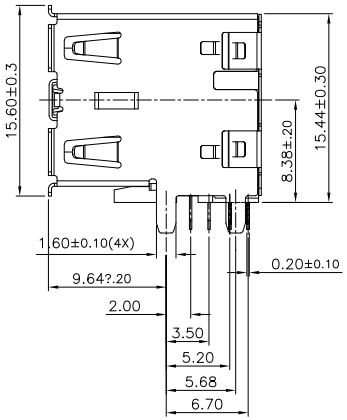

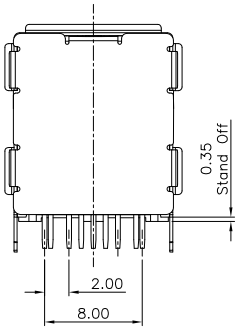

N3A-F A838 D R 9 A 3-A2 05
1 2 3 4 5 6 7 8 9 10

1.N3A:USB 3.0 A TYPE
2.F:FEMALE
3.A838:板上中心高8.38mm
4.D:DIP
5.R:90°
6.9:9T
7.COLOR A:黑色
8. 3:直角
9.TYPE码: A2:双层带翻边
10.Contact Area plating on contacts
5: Au 15u"

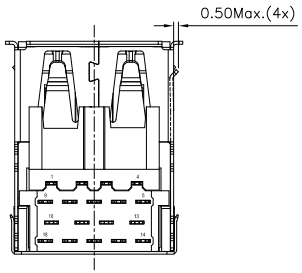

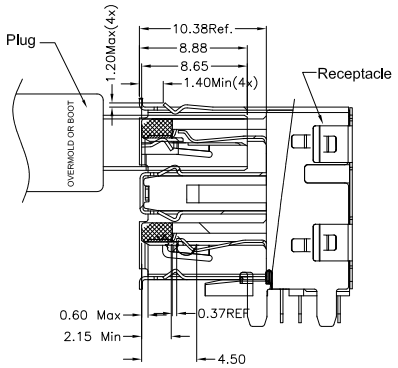

USB3.0 CONTACT PIN					
PIN NO.	1/10	2/11	3/12	4/13	Shell
NAME	VBUS	D-	D+	GND	Shield
PIN NO.	5/14	6/15	7/16	8/17	9/18
NAME	StdA-SSR-	StdA-SSR+	GND-DRAIN	StdA-SST-	StdA-SST+

REV.	REVISION RECORD	DATE
A0	新图面发行	2021.11.29

UNIT: MM
SIZE: A4

GENERAL TOLERANCES	
LINEAR	ANGLES
0.0±0.30	X° REF±6°
0.00±0.20	X° ±3°
0.000±0.10	X° X' ±2°

SCALE 1:1	NAME	DATE
APPROVED	Frey Yang	2021.11.29
DESIGNER	Daniel Dong	2021.11.29
DRAWN	Micky Ma	2021.11.29

PART NO. N3A-FA838DR9A3-A205

DWG NO. ENDE05

TITLE DUAL STACK USB 3.0 A TYPE RECEPTACLE STD RA DIP C/H=8.38mm

JCTC® TERMINAL&CONNECTORS

REV A0 SHEET 1/1