环保物料

| Pin NUMBER | SIGNAL NAME |
|---|---|
| 1 | VBUS |
| 2 | D- |
| 3 | D+ |
| 4 | GND |
| 5 | StdA_SSRX- |
| 6 | StdA_SSRX+ |
| 7 | GND_DRAIN |
| 8 | StdA_SSTX- |
| 9 | StdA_SSTX+ |
| Shell | Shield |

NOTE:

1. MATERIAL:
   - 1.1 INSULATOR:HIGH TEMPERATURE PLASTIC ;BLUE
   - 1.2 CONTACT:COPPER ALLOY
   - 1.3 SHELL:BRASS
2. ELECTRICAL CHARACTERISTICS;
   - 2.1 CONTACT RESISTANCE:30mΩ Max
   - 2.2 CONTACT CURRENT RATING:1.5A
   - 2.3 DIELECTRIC WITHSTANDING VOLTAGE:100 V AC R.M.S.
   - 2.4 INSULATION RESISTANCE 100 MEGOHMS Min
   - 2.5 OPERATING TEMPEROTURE:-40° C ～ 85° C
3. MECHANICAL CHARACTERISTICS:
   - 3.1 MATING FORCE:35 N Max
   - 3.2 UNMATED FORCE:10 N Min

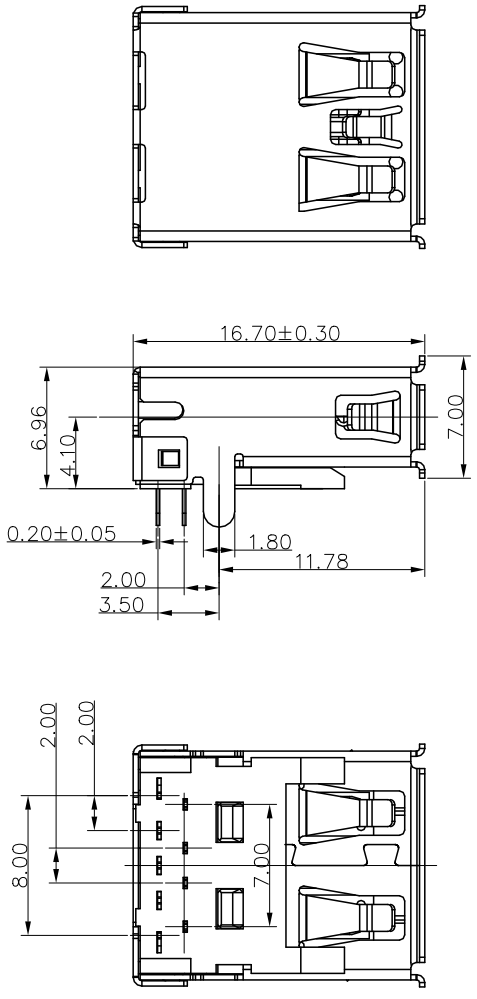


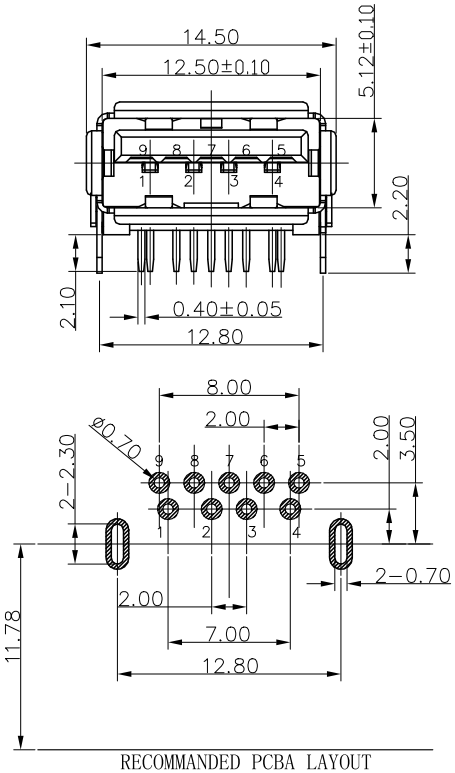


RECOMMANDED PCBA LAYOUT
(TOLERANCE+±0.05)

N3A-F A696 D R L B 3-41 XX
1 2 3 4 5 6 7 8 9 10

1. N3A:USB 3.0 A TYPE
2. F:FEMALE
3. A696=板上高度6.96mm
4. D:DIP
5. R:90°
6. L:LCP
7. COLOR B:兰色
8. 外壳脚:3:直脚
9. TYPE码:
10. Contact Area plating on contacts

| | |
|---|---|
| 01: G/F | 03: Au 3u" |
| 05: Au 5u" | 10: Au 10u" |
| 15: Au 15u" | 30: Au 30u" |

| REV. | REVISION RECORD | DATE |
|---|---|---|
| A0 | 新图面发行 | 21.11.23 |
| A1 | 更换图框发行 | 24.01.31 |

| GENERAL TOLERANCES | |
|---|---|
| LINEAR | ANGLES |
| 0.0±0.30 | X° REF±6° |
| 0.00±0.20 | X° ±3° |
| 0.000±0.10 | X° X' ±2° |

UNIT: MM
SIZE: A4

| SCALE 1:1 | NAME | DATE |
|---|---|---|
| APPROVED | | |
| DESIGNER | | |
| DRAWN | Dalan Dai | 24.01.31 |

PART NO. N3A-FA696DRLB3-4101

DWG NO. ENDE05

TITLE USB 3.0 AF 90度DIP直脚有卷边

JCTC®

REV A1 SHEET 1/1