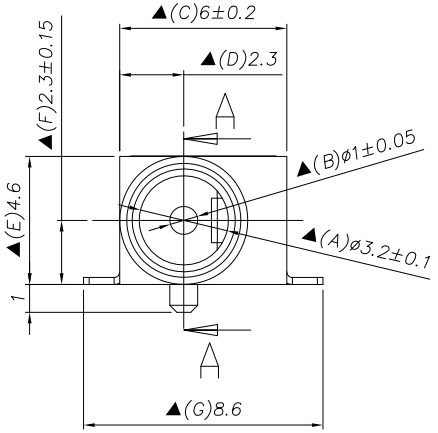

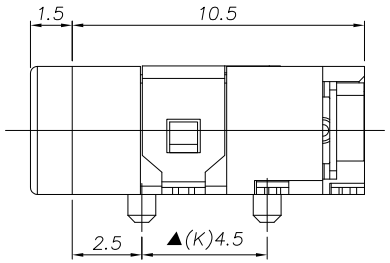

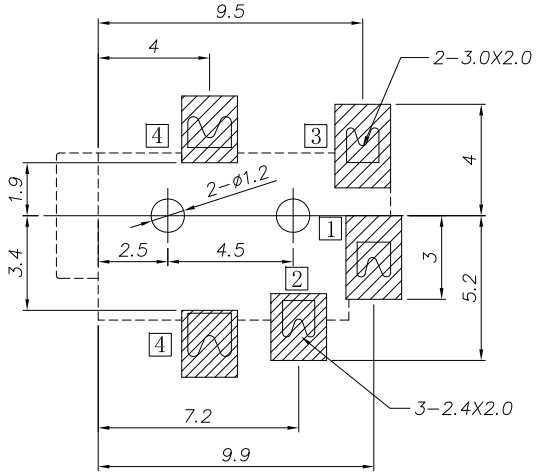

Specification:

1.Rating : DC 12V 2.5A;
2.Contact resistance: ≤30mΩ;
After test:≤50mΩ
3.Insulation resistance: ≥100MΩ (500VDC);
After test:≥50MΩ
4.Withstand voltage: 500VAC ;
5.Insertion and extraction force: 3N~30N;
6.life test: 5000cycles min;
7.Operation temperature range:-20℃~70℃
8.Preservative temperature range:-40℃~85℃
9.Sign"▲ "is importance dimension

J0-3	E23	S	R	0	3	9	0-00	21
1	2	3	4	5	6	7	8 9	10 11

1.J0:DC JACK
2.3:ø3.0mm
3.E23=板上中心高2.3mm
4.S:SMT
5.R:90°
6.0:带外壳
7.3:3PIN
8.9:9T
9.柱子/唛啦
0:无柱无唛啦
10.TYPE 码 00:
11.Contact Area plating on contacts
21:Silver plating

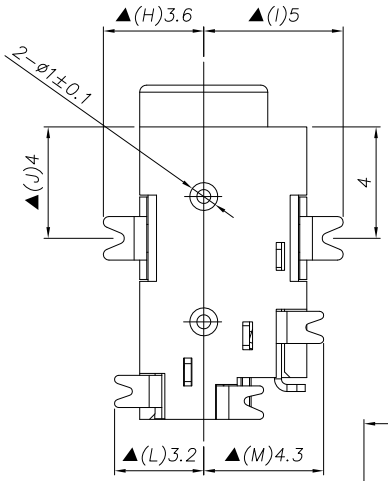

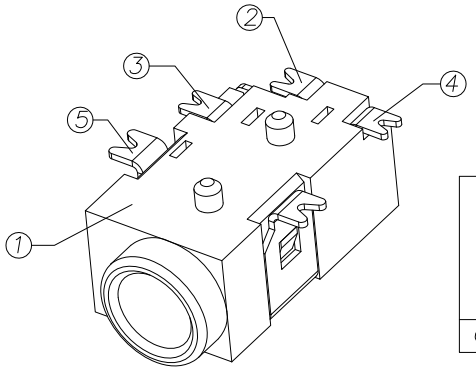

RECOMMENDED P.C.B. LAYOUT
UNSPECIFIED TOLERANCE: ±0.05
(Copper-sided view)

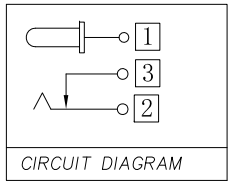

CIRCUIT DIAGRAM

□ : TERMINAL NO.

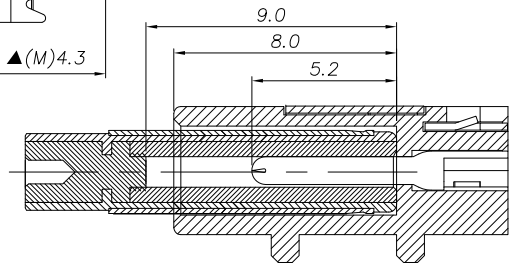

SEC: A-A

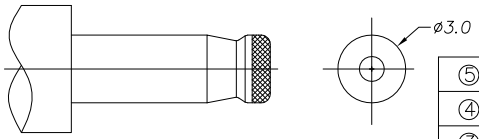

DC MATE PLUG

NO.	DESCRIPTION	QTY	MATERIAL	REMARK
⑤	Shield plate	1	Brass t0.25	Ag plating
④	Shunt terminal 3	1	Brass t0.25	Ag plating
③	Tip spring 2	1	Phosphor bronze t0.25	Ag plating
②	Center pin 1	1	Brass	Ag plating
①	Housing	1	PA9T UL94V-0	Black

REV.	REVISION RECORD	DATE
A0	新版发行	22.09.12
A1	换图框发行	23.07.04

GENERAL TOLERANCES	
LINEAR	ANGLES
0.0±0.25	X° REF±6°
0.00±0.15	X° ±3°
0.000±0.08	X° X' ±2°

UNIT: MM
SIZE: A4

SCALE 1:1	NAME	DATE
APPROVED	Daniel Dong	23.07.04
DESIGNER	Micky Ma	23.07.04
DRAWN	Xiao	23.07.04

PART NO. J0-3E23SR0390-0021
DWG NO. ENDE05
TITLE Φ3.0 卧式 DC POWER JACK
JCTC®
REV A1 SHEET 1/1