环保物料

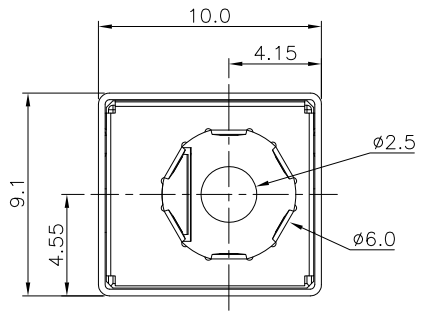

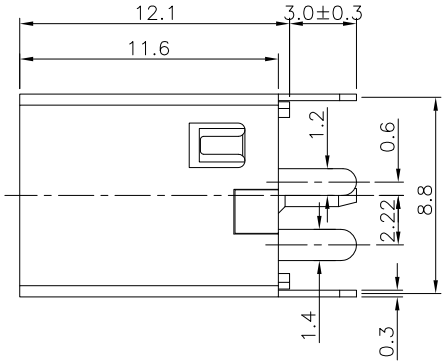

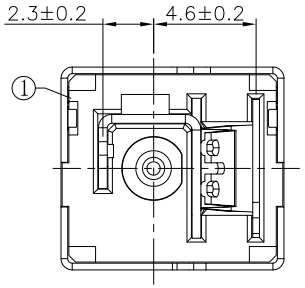

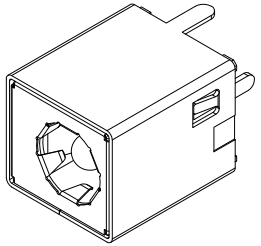

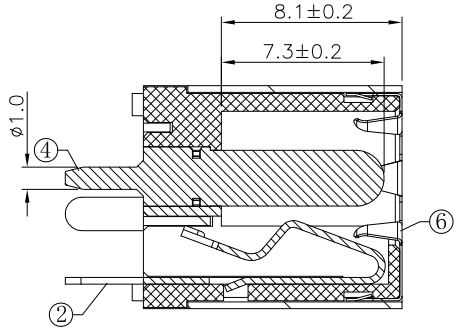

SECTION

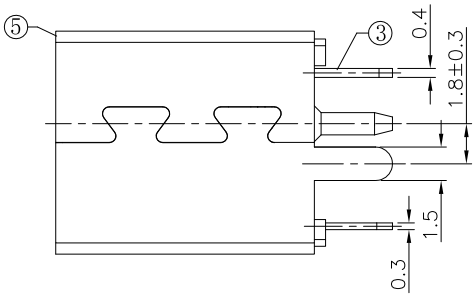

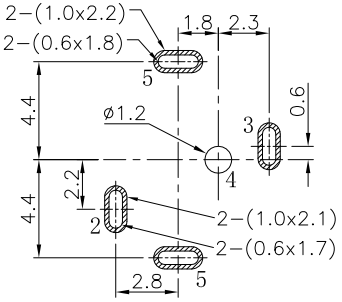

P.C.B LAYOUT
TOP VIEW

SCHEMATIC

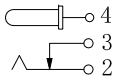

J0-2	H12	D	V	0	4	T	4-06	21
1	2	3	4	5	6	7	8 9	10 11

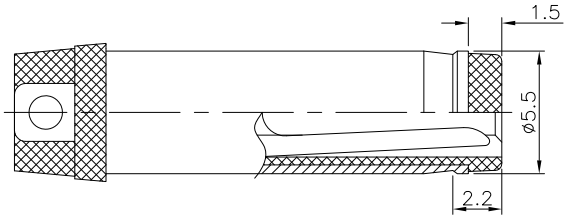

RECOMMENDED PLUG

SPECIFICATION
1. Rating : DC 20V 5.5A;
2. Contact resistance: ≤0.03Ω;
3. Insulation resistance: ≥100MΩ (DC250V);
4. Withstand voltage: 500VAC ;
5. Insertion and extraction force: 3-30N;
6. life test: 5,000 cycles。

1.J0:DC JACK
2.2:ø2.5mm
3.H12=直立式，板上高度12.10mm
4.D:DIP
5.V:180°
6.0:带外壳
7.4:4PIN
8.TYPE T
9.柱子/唛啦 4:带一个柱子无唛啦
10.TYPE 码 06:
11.Contact Area plating on contacts
21:Silver plating

NO.	DESCRIPTION	QTY	MATERIAL	PLATING
6	COAT	1	SUS301	N/A
5	SHELL	1	BRASS	Ni-Plating
4	PIN	1	BRASS	Au-Plating
3	CONTACT FOOT	1	BRASS	Ag-Plating
2	SPRING PIECE	1	BRONZE	Ag-Plating
1	HOUSING	1	PA9T	

REV.	REVISION RECORD	DATE
A0	The new version file were released	2021.4.21

UNIT: MM
SIZE: A4

GENERAL TOLERANCES	
LINEAR	ANGLES
0.0±0.30	X° REF±6°
0.00±0.20	X° ±3°
0.000±0.10	X° X' ±2°

SCALE 1:1	NAME	DATE
APPROVED	Frey Yang	2021.4.21
DESIGNER	Daniel Dong	2021.4.21
DRAWN	Li Xing Ze	2021.4.21

PART NO. J0-2H12DV04T4-0621

DWG NO. ENDE05

TITLE Φ5.5立式 H=12.1 DC POWER JACK

JCTC® TERMINAL&CONNECTORS

REV A0 SHEET 1/1