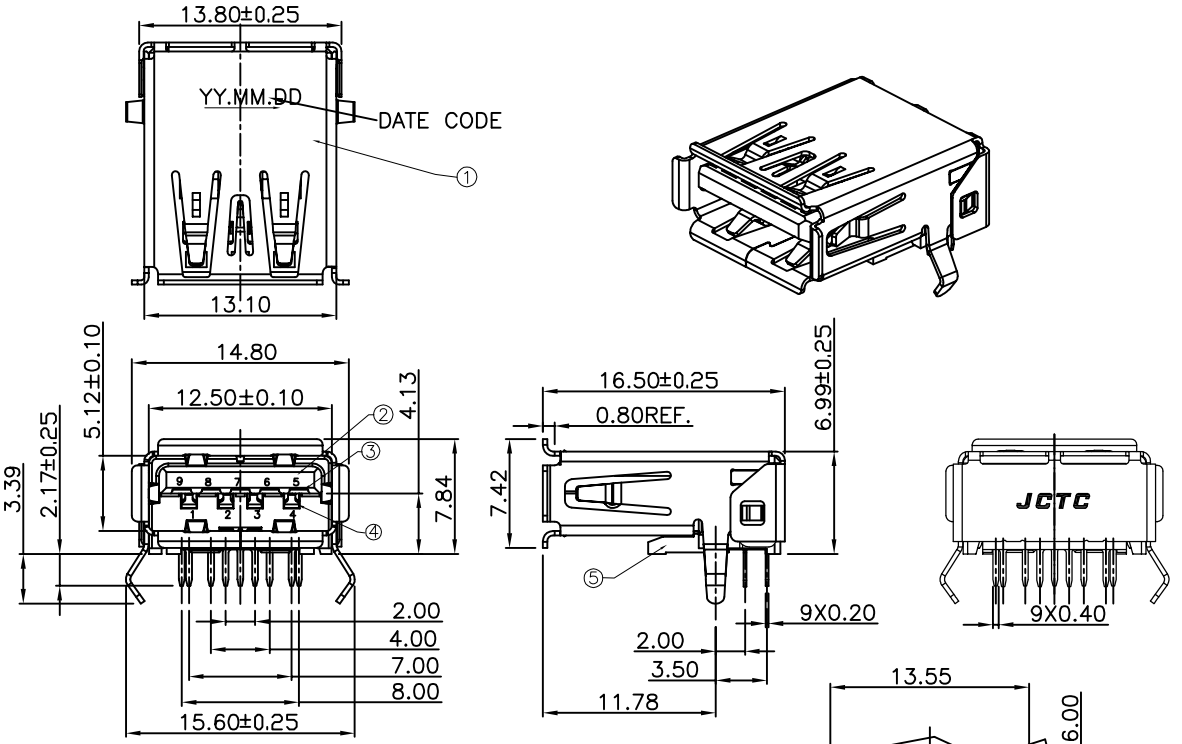

MOUNTING PANEL CUTOUT
(INTERNAL SIDE)

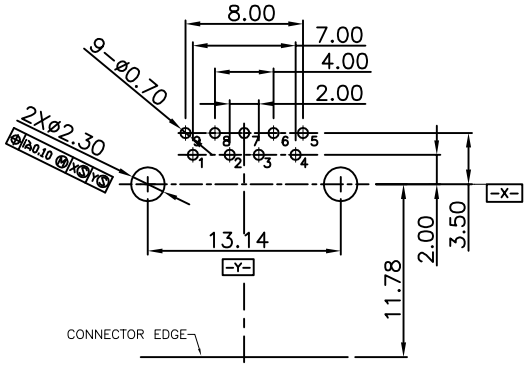

RECOMMENDED P.C.B LAYOUT (COMPONENT SIDE)

PCB THICKNESS: 1.60±0.05mm
DEFAULT TOLERANCE: ±0.05

The product using material and processing must conform to the "WI-PZ-142" HSF technical standard control requirements

NOTES:

1. ELECTRICAL CHARACTERISTICS :
   1-1. CONTACT CURRENT RATING:
   1.8 A FOR VBUS PIN AND ITS CORRESPONDING GND PIN.
   0.25 A MIN FOR ALL OTHER CONTACTS.
   1-2. CONTACT RESISTANCE:
   30 MILLIOHMS MAX FOR VBUS AND GND CONTACTS.
   50 MILLIOHMS MAX FOR ALL OTHER CONTACTS.
   1-3. DIELECTRIC WITHSTANDING VOLTAGE : 100 VRMS AC MIN.
   1-4. INSULATION RESISTANCE: 100 MEGOHMS MIN.
2. MECHANICAL CHARACTERISTICS:
   2-1. CONNECTOR INSERTION FORCE: 35N MAX.
   2-2. CONNECTOR EXTRACTION FORCE: 10N MIN INITIAL, 8N MIN AFTER DURABILITY.
   2-3. DURABILITY: 5000 CYCLES.
   2-4. OPERATING TEMPERATURE: -55°C TO +85°C
3. RECOMMENED PROCESS: WAVE SOLDER 260°C,3~5SECONDS.
4. THE CONNECTOR IS ROHS COMPLIANT AND HALOGEN FREE COMPLIANT.
5. PRODUCT NO. : 72001Z09-IRXA2-HF-XX
   G:BLUE 300C
   A:BLACK
   HF:HALOGEN FREE
   01:GOID FLASH(PA66 MATERIAL)
   02:3u" GOID(PA66 MATERIAL)
   03:15u" GOID(PA66 MATERIAL)
   04:30u" GOID(PA66 MATERIAL)
   C2 05:GOID FLASH(PA9T MATERIAL)
   C2 06:3u" GOID(PA9T MATERIAL)
   C2 07:15u" GOID(PA9T MATERIAL)
   C2 08:30u" GOID(PA9T MATERIAL)

PIN ASSIGNMENT:

Pin No.	1	2	3	4	5	6	7	8	9
Signal Name	VBUS	D-	D+	GND	SSRX-	SSRX+	GND_DRAIN	SSTX-	SSTX+
Remark	USB2.0 Contact Pin				USB3.0 Contact Pin				

NO.	DESCRIPTION	QTY.	MATERIAL	TREATMENT
⑤	COVER	1	PA9T&PA66 UL 94V-0	COLOR: BLUE&BLACK.
④	USB2.0 TERMINAL	4	BRONZE	NICKEL UNDERPLATING OVERALL; GOLD PLATED AT CONTACT AREA; LEAD FREE TIN ALLOY PLATED AT TERMINATION.
③	USB3.0 TERMINAL	5	COPPER	
②	HOUSING	1	PA9T&PA66 UL 94V-0	COLOR: BLUE&BLACK
①	SHELL	1	STAINLESS STEEL	NICKEL PLATED OVERALL, KINK AND TAB WITH LEAD FREE TIN ALLOY. C3

REV.	REVISION RECORD	DATE
C2	高温料由LCP改为PA9T	15.01.19
C3	修改青蛙脚电镀规格	15.04.08
C4	变更公司名称	17.03.20
C5	依TN1810300203执行	18.10.31

UNIT: MM
SIZE: A4

GENERAL TOLERANCES	
LINEAR	ANGLES
0.0±0.25	X° REF±6°
0.00±0.15	X° ±3°
0.000±0.08	X° X'±2°

SCALE: 1:1	NAME	DATE
APPROVED		
DESIGNER		
DRAWN	黄小锋	18.10.31

JCTC® 胜蓝科技股份有限公司
TERMINAL&CONNECTORS 东莞市富智达电子科技有限公司

TITLE: USB 3.0 A TYPE DIP 90°

PART.NO: 72001Z09-IRXA2-HF-XX
DWG.NO: ENDE05
REV: C5
SHEET: 1/1